TELESTE AC 8810

1.2 GHZ INTELLIGENT FIBRE OPTIC PLATFORM

AC8810 is an intelligent, dual active output node with upstream segmentation. It offers high output level (Umax 112 QAM / 113.0 dBµV) and supports 1.2 GHz/204 MHz bandwith. Remote monitoring and control is available with transponder (HMS/CATVisor or DOCSIS).

- Improved 1.2 GHz GaN hybrid technology
- 204 MHz upstream band
- Local push button user interface and LED display
- Automatic alignment of both forward and return path
- Redundant power supply
- Efficient surge and ESD protection
- Electrical level and slope controls
- With AC6992/AC6980 transponder plug-in: CATVisor / HMS (AC6992) or DOCSIS (AC6980) remote connection, ALC with fully user programmable pilots, Forward path spectrum analyser, Return path signal quality monitoring with automatic ingress control, True plug-and-play with single pushbutton alignment and Return path pilot generator (AC6992)

SPECIFICATIONS

DOWNSTREAM SIGNAL PATH		
Light wavelength	nm	1290…1610
Optical input power range	dBm	-8…0
Frequency range	MHz	85…1218
Return loss	dB	18
Gain limited output level	dBµV	2 x 118
Input gain control (OLC)	dB	0…-26
Mid-stage gain control	dB	0…-30
Mid-stage slope control	dB	0…20
Flatness	dB	±0.5
Group delay	ns	2
Test point	dB	-20
Transponder connection	dB	-19
Noise current density	pA/√Hz	6.0
Umax(112 QAM channels) @1.0 GHz	dBµV	113.0
Umax(138 QAM channels) @1.2 GHz	dBµV	111.5
CTB 41 channels	dBµV	116.0
CSO 41 channels	dBµV	117.0
UPSTREAM SIGNAL PATH		
Frequency range	MHz	5…204
Return loss	dB	18
Ingress switching	dB	0 / -6 / < -45
OMI adjustment	dB	0…-20
OMI test point	dB	-5
Transponder connection	dB	-38
Isolation between US paths	dB	> 55

GENERAL		
Power consumption	W	44
Supply voltage AC	V	27…65 sinus or square wave 40…90 square wave 230
Maximum current feed through	A	8.0 / port
Hum modulation	dB	70
Optical connectors		SC/APC, FC/APC, E-2000
Output connectors		PG11
Test point connectors		F female
Dimensions (h x w x d)	mm	245 x 255 x 155
Weight	kg	5
Operating temperature	°C	-40…+55
Class of enclosure		IP 54
EMC		EN50083-2
ESD	kV	4
Surge	kV	6 (EN 60728-3)

BLOCK DIAGRAM

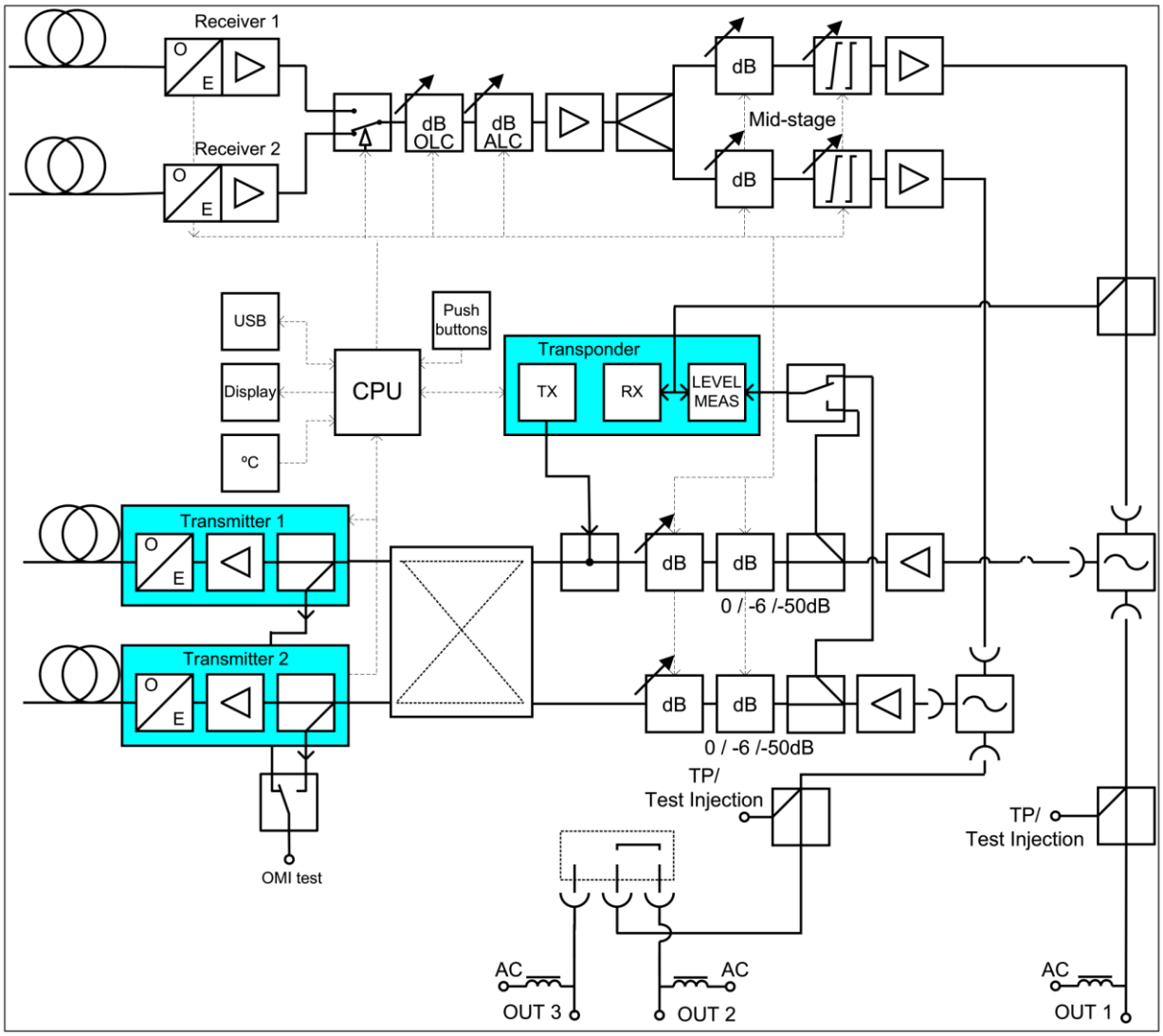

ORDERING INFORMATION

Selection of optical passives (8-1) is defined detailed in separate specification document.

AC8810 configuration map

	1-	2-	3-	4-	5-	6-	7-	8-	9-	10-	11-
	1 2 3	1 2 3 4	1	1	1	1 3	1 3	1	1 2	1	1 2 3
AC8810	-	-	-	-	-	-	-	-	-	-	-

1-1 Platform type
- A Standard 1.2 GHz

1-2 Power supply
- A Single PSU, 65 VAC (1x AC6310)
- B Double PSUs, 65 VAC (2 x AC6310)
- C Local powering, euro plug (230 VAC)
- D Customer specific option
- E Single PSU, 90 VAC
- F Double PSUs, 90 VAC

1-3 Fiber organicing
- A Standard fibre organiser

2-1 Fibre feed-through adapter
- E 5/8 Adapter (KDC316)
- G 1-4 fibres (KDO900)
- X None

2-2 Output 3 connection
- A PG11
- B 5/8"
- C IEC
- D 3.5/12
- E F
- X None (PG11 sealing plug)

2-3 Output 2 connection
- A PG11
- B 5/8"
- C IEC
- D 3.5/12
- E F

2-4 Output 1 connection (first from right)
- A PG11
- B 5/8"
- C IEC
- D 3.5/12
- E F

3-1 Optical connector for receiver RX1
- A SC/APC, 9 deg.
- C E-2000
- D SC/APC, 8 deg.

4-1 Optical connector for receiver RX2
- A SC/APC, 9 deg.
- C E-2000
- D SC/APC, 8 deg.

5-1 Diplexer filter
- D 65/85 MHz (2 x CXF065)
- G 65/85 MHz (2 x CXF065 19)
- H 85/105 MHz (2 x CXF085)
- I 85/105 MHz (2 x CXF085 18) NA
- J 204/258 MHz (2 x CXF204)
- X None

6-1 Return path transmitter TX1
- 40 +1dBm FP 1310 nm (AC6740)
- 41 +3 dBm CWDM 1430 nm (AC6741)
- 42 +6 dBm CWDM 1430 nm (AC6742)
- 43 +3 dBm CWDM 1450 nm (AC6743)
- 44 +6 dBm CWDM 1450 nm (AC6744)
- 45 +3 dBm DFB 1310 nm (AC6745)
- 46 +6 dBm DFB 1310 nm (AC6746)
- 47 +3 dBm CWDM 1470 nm (AC6747)
- 48 +6 dBm CWDM 1470 nm (AC6748)
- 49 +3 dBm CWDM 1490 nm (AC6749)
- 50 +6 dBm CWDM 1490 nm (AC6750)
- 51 +3 dBm CWDM 1510 nm (AC6751)
- 52 +6 dBm CWDM 1510 nm (AC6752)
- 53 +3 dBm CWDM 1530 nm (AC6753)
- 54 +6 dBm CWDM 1530 nm (AC6754)
- 55 +3 dBm CWDM 1550 nm (AC6755)
- 56 +6 dBm CWDM 1550 nm (AC6756)
- 57 +3 dBm CWDM 1570 nm (AC6757)
- 58 +6 dBm CWDM 1570 nm (AC6758)
- 59 +3 dBm CWDM 1590 nm (AC6759)
- 60 +6 dBm CWDM 1590 nm (AC6760)
- 61 +3 dBm CWDM 1610 nm (AC6761)
- 62 +6 dBm CWDM 1610 nm (AC6762)
- XX None

6-3 Optical connector for transmitter TX1
- A SC/APC, 9 deg.
- C E-2000
- D SC/APC, 8 deg.
- X None

7-1 Return path transmitter TX2
- 40 +1dBm FP 1310 nm (AC6740)
- 41 +3 dBm CWDM 1430 nm (AC6741)
- 42 +6 dBm CWDM 1430 nm (AC6742)
- 43 +3 dBm CWDM 1450 nm (AC6743)
- 44 +6 dBm CWDM 1450 nm (AC6744)
- 45 +3 dBm DFB 1310 nm (AC6745)
- 46 +6 dBm DFB 1310 nm (AC6746)
- 47 +3 dBm CWDM 1470 nm (AC6747)
- 48 +6 dBm CWDM 1470 nm (AC6748)
- 49 +3 dBm CWDM 1490 nm (AC6749)
- 50 +6 dBm CWDM 1490 nm (AC6750)
- 51 +3 dBm CWDM 1510 nm (AC6751)
- 52 +6 dBm CWDM 1510 nm (AC6752)
- 53 +3 dBm CWDM 1530 nm (AC6753)
- 54 +6 dBm CWDM 1530 nm (AC6754)
- 55 +3 dBm CWDM 1550 nm (AC6755)
- 56 +6 dBm CWDM 1550 nm (AC6756)
- 57 +3 dBm CWDM 1570 nm (AC6757)
- 58 +6 dBm CWDM 1570 nm (AC6758)
- 59 +3 dBm CWDM 1590 nm (AC6759)
- 60 +6 dBm CWDM 1590 nm (AC6760)
- 61 +3 dBm CWDM 1610 nm (AC6761)
- 62 +6 dBm CWDM 1610 nm (AC6762)
- XX None

7-3 Optical connector for transmitter TX2
- A SC/APC, 9 deg.
- C E-2000
- D SC/APC, 8 deg.
- X None

8-1 Optical passive (see detailed spec)
- F1 WDM with 8 deg. SC/APC connectors
- F2 WDM with 8 deg. SC/APC connectors
- F3 2 x WDM with 8 deg. SC/APC connectors
- F4 2 x WDM with 9 deg. SC/APC connectors
- F7 WDM with 8 deg. E-2000 connectors
- F8 WDM with 8 deg. E-2000 connectors
- F9 WDM with 8 deg. E-2000 connectors
- XX None

9-1 Accessories
- X None

9-2 Reserved for future
- X None

10-1 Transponder module
- E Transponder and ALSC module (AC6992)
- G DOCSIS transponder (AC6981)
- X None

11-1 Transponder communication protocol
- A CATVisor compatible
- B HMS/SNMP compatible

11-2 Settings
- X Factory default
- A Customer specified (ECML file)

11-3 Product keys (software features)
- X None
- A Auto alignment, spectrum and ingress analyzer, pilot generator
- B Optical receiver 2 activation
- C A + B

DOC0023390, Rev005